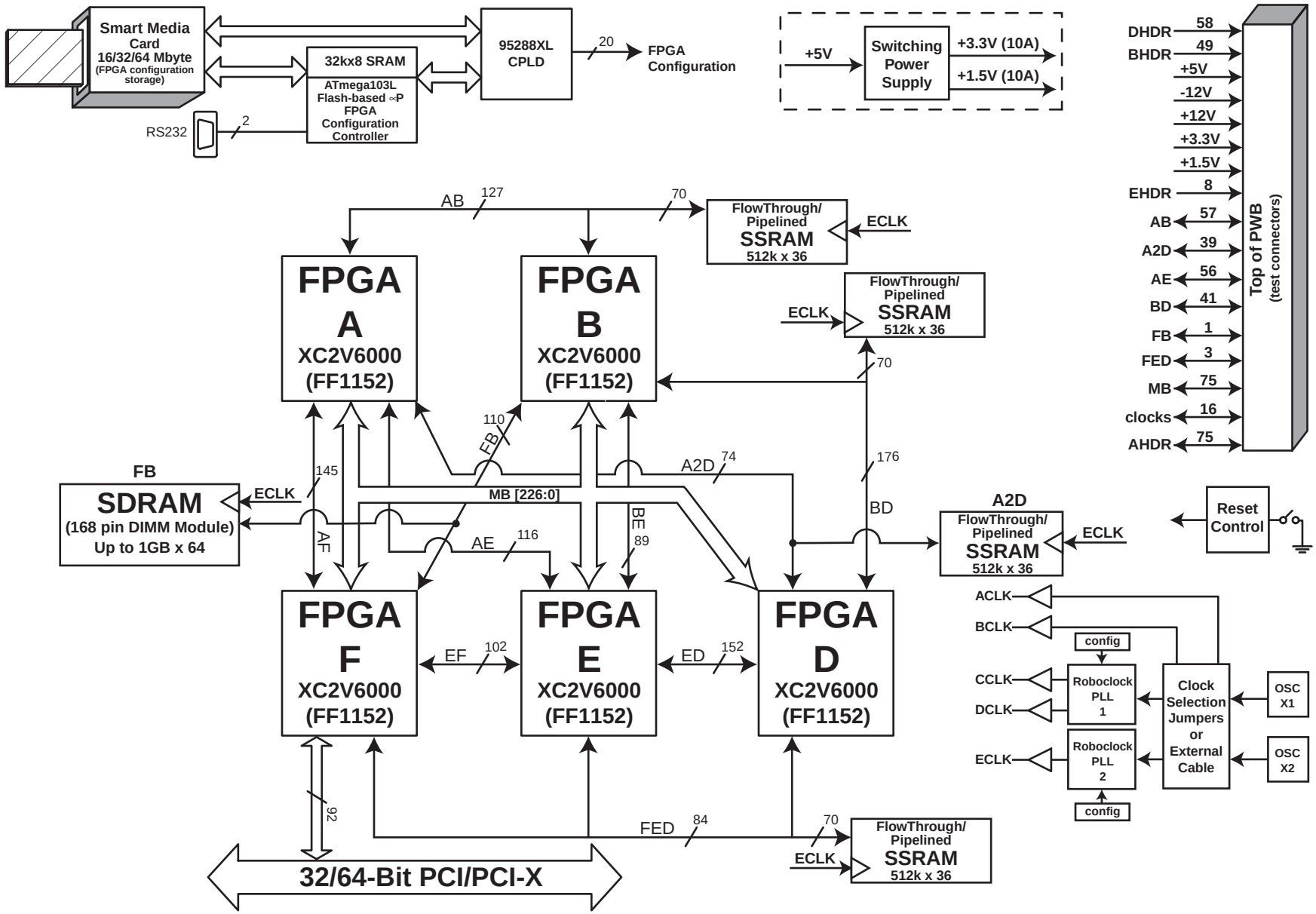
Smart Media Card 16/32/64 Mbyte (FPGA configuration storage)
32kx8 SRAM
ATmega103L Flash-based ∞P FPGA Configuration Controller
RS232
2
95288XL CPLD
20
FPGA Configuration
+5V
Switching Power Supply
+3.3V (10A)
+1.5V (10A)
DHDR 58
BHDR 49
+5V
-12V
+12V
+3.3V
+1.5V
EHDR 8
AB 57
A2D 39
AE 56
BD 41
FB 1
FED 3
MB 75
clocks 16
AHDR 75
Top of PWB (test connectors)
AB 127
70
FlowThrough/ Pipelined SSRAM 512k x 36
ECLK
FPGA A XC2V6000 (FF1152)
FPGA B XC2V6000 (FF1152)
FlowThrough/ Pipelined SSRAM 512k x 36
ECLK
70
110
FB
A2D 74
176
FB
SDRAM (168 pin DIMM Module) Up to 1GB x 64
ECLK
145
MB [226:0]
BE
89
BD
A2D
FlowThrough/ Pipelined SSRAM 512k x 36
ECLK
Reset Control
AF
AE 116
ACLK
BCLK
config
FPGA F XC2V6000 (FF1152)
EF 102
FPGA E XC2V6000 (FF1152)
ED 152
FPGA D XC2V6000 (FF1152)
CCLK
DCLK
Roboclock PLL 1
Clock Selection Jumpers or External Cable
OSC X1
ECLK
Roboclock PLL 2
OSC X2
config
92
FED 84
70
FlowThrough/ Pipelined SSRAM 512k x 36
ECLK
32/64-Bit PCI/PCI-X